LET	ALTERATION	DATE	BY
A	CHG-NOS -12 ADD DIM 10 DIA & 5 1/8 DIA WAS 7 WT CHG REF		

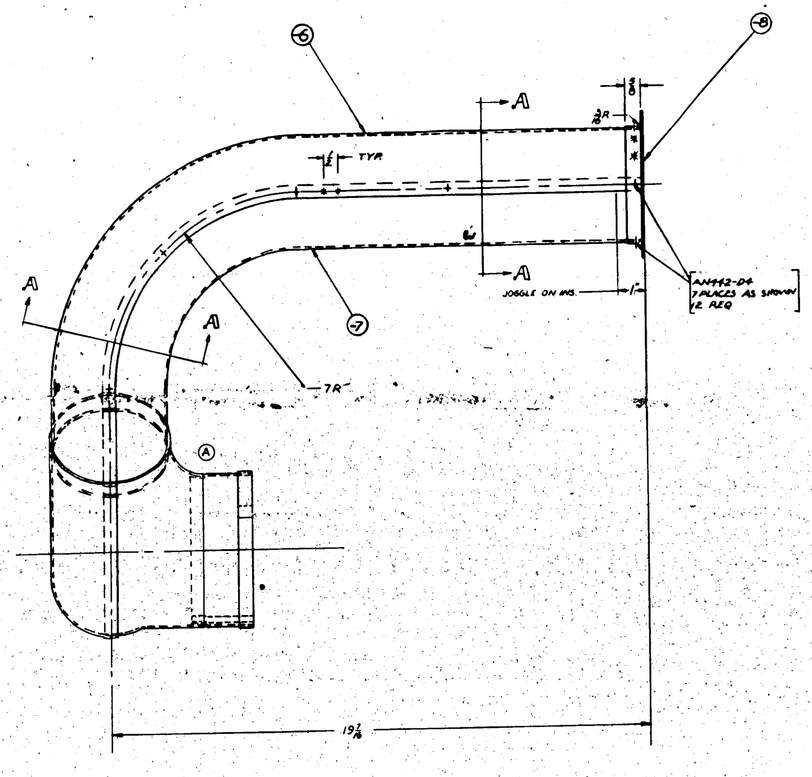

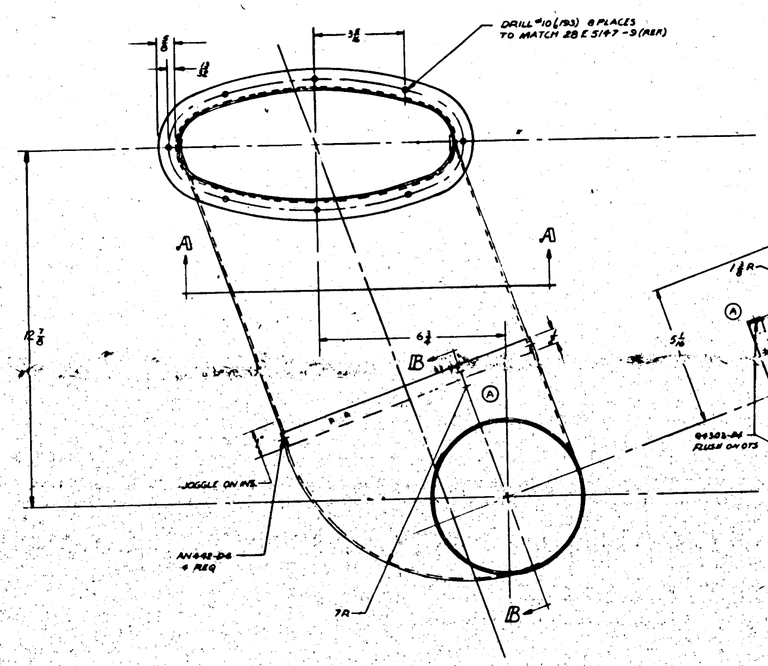

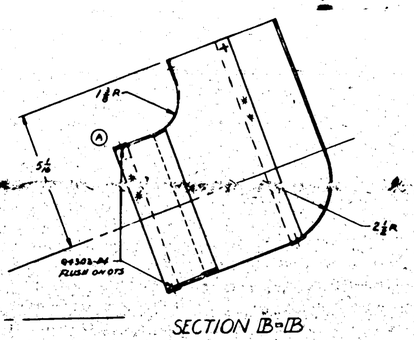

SECTION B-B

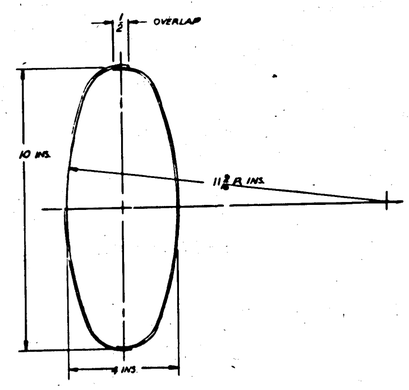

SECTION A-A

TYPICAL CROSS SECTION IN PLANE SHOWN

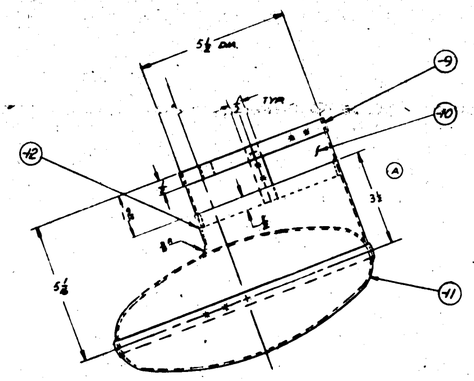

✱ SPOTWELDING SYMBOL
THIS SYMBOL INDICATES SPOTWELDING
RIVETS ARE NOT INDICATED ON THIS
DRAWING BY SYMBOLS

PART NO.	STOCK	MATERIAL	SPEC.	LH RQ	RH RQ	LH RQ	RH RQ	LH RQ	RH RQ	LH RQ	RH RQ
PARTS LIST PER REV.				-0	-2	-3	-4	-5			
-12	0.50 X 1.63 X 19	AL-2450-T4	AN-A								
-11	0.50 X 1.33 X 17	AL-2450-T4	AN-A								
-10	0.50 X 1.22 X 22	AL-2450-T4	AN-A								
-9	0.50 X 1.18 X 18	AL-2450-T4	AN-A								
-8	0.50 X 0.81 X 12	AL-2450-T4	AN-A								
-7	0.50 X 0.75 X 19	AL-2450-T4	AN-A								
-6	0.50 X 0.75 X 18	AL-2450-T4	AN-A								
94303-D4 AN442E-D4											

PART NO.	MODEL	FINISH	REV.
28E5143	PBY-5		

DESIGNED FOR AIRPLANE
REPLACED
REPLACED BY
SCALE 6" = 1'0"
DRAWN
CHECKED
ENGINEERING APPROVAL
MATERIAL
FINISH Z-P-2AP
HEAT TREAT
NAME DUCT ASSY-COOLING AIR INLET-AUX POWER PLANT-LOWER
CONSOLIDATED AIRCRAFT CORP. SAN DIEGO, CALIF.
SIZE J
28E5143

H 240